DOCUMENT: 0-93595

NOTES:

1. DESIGNED TO BE LASER WELDED TO AN ALUMINUM HOUSING.
2. HERMETIC LEAK RATE:
   LESS THAN OR EQUAL TO $1X10^{-9}$ CC/SEC He AT 1 ATM DIFFERENTIAL PRESSURE.
3. ELECTRICAL REQUIREMENTS:
   INSULATION RESISTANCE: GREATER THAN 5,000 MEGOHMS AT 500±10% VDC AT 25°C WHEN TESTED IAW MIL-STD-1344, METHOD 3003.
   DIELECTRIC WITHSTANDING VOLTAGE: MUST SHOW NO EVIDENCE OF BREAKDOWN OR FLASHOVER WHEN SUBJECTED TO 600 VAC RMS 60Hz IAW MIL-STD-1344, METHOD 3001. DURATION OF APPLICATION TO BE 1 SEC MIN.
4. MATERIALS:
   SHELL: EXPLOSION BONDED STAINLESS STEEL TO 4XXX-SERIES ALUMINUM.
   CONTACTS: BERYLLIUM-COPPER IAW ASTM B196 OR ASTM B197.
   INSULATORS: KRYOFLEX 313 PROPRIETARY POLYCRYSTALLINE CERAMIC.
5. FINISH CONTACTS: ELECTROLYTIC NICKEL PLATE IAW QQ-N-290, .000050/.000100 THICK.
   TIN PLATE PER MIL-T-10727 .000300/.00050 THICK.
   SOLDER DIP PIN ENDS WITH Sn 96.5/ Ag 3.5 TO DIMENSIONS SHOWN
   SHELL: CONVERSION COAT IAW MIL-C-5541, CLASS 1A
6. ORDERING INFORMATION:
   PLEASE SPECIFY ACCORDING TO THE FOLLOWING

93595 - X

BASE PART NUMBER TO ORDER — PIN COUNT (9,15,21,25,31,37, OR 51)

PROPRIETARY

THE DESIGN DESCRIBED HEREIN MAY REQUIRE THE USE OF PATENTED, PROPRIETARY TECHNOLOGIES OF PA&E. NO LICENSE UNDER SUCH PATENTS IS IMPLIED THROUGH THE TRANSMISSION OR POSSESION OF THIS DOCUMENT.

PACIFIC AEROSPACE & ELECTRONICS

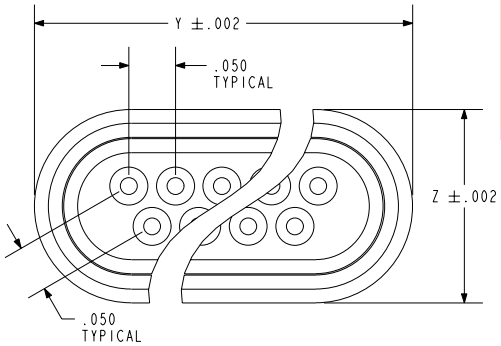

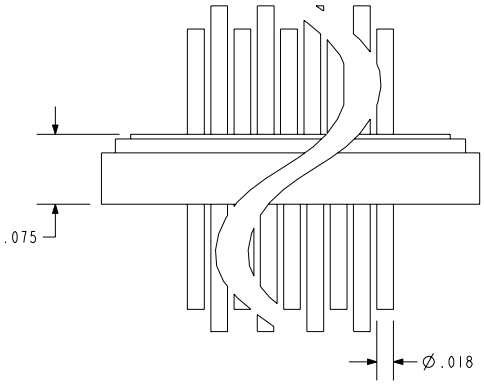

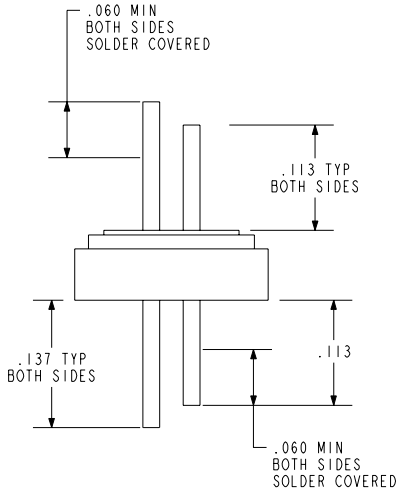

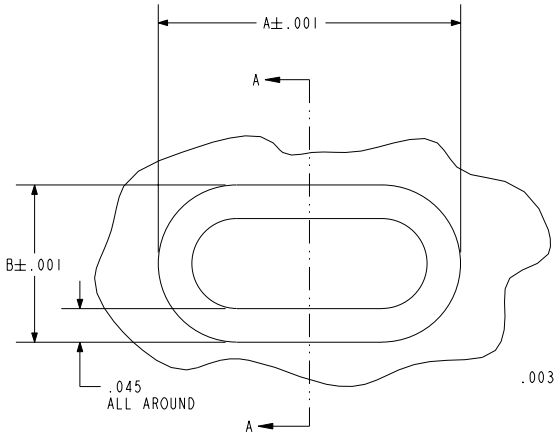

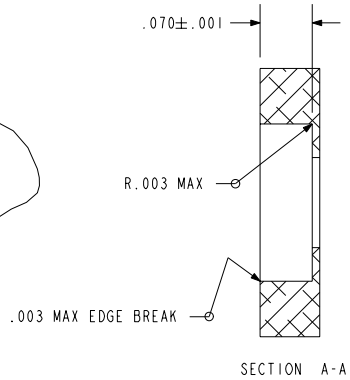

HOLE DETAIL

TABLE 1				
NUMBER OF CONTACTS	A	B	Y	Z
9	.406	.211	.403	.208
15	.556	.211	.553	.208
21	.706	.211	.703	.208
25	.806	.211	.803	.208
31	.956	.211	.953	.208
37	1.106	.211	1.103	.208
51	1.099	.254	1.096	.251

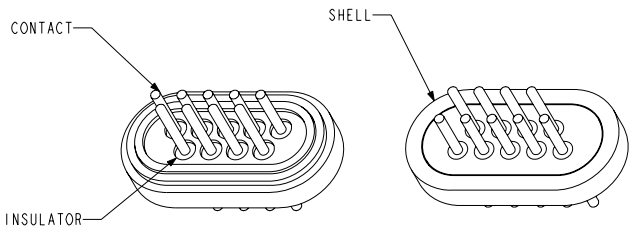

PACIFIC AEROSPACE & ELECTRONICS, INC.
434 Olds Station Rd. Wenatchee, Washington 98801
WWW.PACAERO.COM

TITLE: CONNECTOR, MICRO-D, CUSTOM, AL. COMPATIBLE

THIRD ANGLE PROJECTION

CAGE CODE: 64567

VERSION | RELEASE DATE: 10-07-03 | SALES DRAWING | SHEET: 1 OF 1 | DOCUMENT: 0-93595

ENG-014 | pro/ENGINEER